No of Pages : 3 **Course Code : 23MX22**

Roll No:
(To be filled in by the candidate)

PSG COLLEGE OF TECHNOLOGY, COIMBATORE - 641 004

SEMESTER EXAMINATIONS, JUNE 2024

MCA Semester : 2 / PhD - MATHS

23MX22 DESIGN AND ANALYSIS OF ALGORITHMS

Time : 3 Hours **Maximum Marks :100**

INSTRUCTIONS:

1. Answer **ALL** questions. Each question carries 25 Marks.
2. Subdivisions (a) carries 5 marks each, subdivision (b) carries 8 marks each and subdivision (c) carries 12 marks each.

2.Course Outcome : Table

Qn.1	CO1	Qn.2	CO2	Qn.3	CO3	Qn.4	CO4

COs	At the end of learning this course, students will be able to
CO1	Efficiently use balanced binary and multi way search trees to store and retrieve data.
CO2	Formulate algorithms to solve complex problems using divide and conquer and greedy method of algorithm design.
CO3	Apply dynamic programming to solve optimization problems.
CO4	Apply backtracking and branch and bound techniques to solve complex problems by systematically exploring possible solutions.

		Question	(BTL)
1.	a)	Techie John tries to build a search engine with an auto complete feature. Suggest a suitable data structure. Illustrate the use of suggested data structure by inserting the following words into the dictionary: desk, deck, dog, dock, dogs, code, cope and cape and then delete the words, 'dogs' and 'cope'. Describe how insertion, deletion and searching operations are performed in the suggested data structure.	(L4)
	b)	What is an AVL tree? Describe the various types of rotations. Create an AVL tree by inserting the following elements one by one in the given order: 50, 53, 58, 40, 34, 30, 32, 65, 60, 25 and 26. Delete 26, 53 and 40. Show the resultant tree.	(L6)
	c) i)	Define B tree of order m. List the rules for insertion and deletion. (4)	(L3)
	ii)	Create a B tree of order 5 with the following elements: 76, 19, 12, 9, 95, 83, 72, 61, 43, 40, 55, 18, 14, 17, 50, 28 and 20. Delete the elements 18, 40, 55 and show the resultant tree. (8)	(L6)
2.	a)	What type of algorithm design paradigm is followed to solve the problem of optimal binary merge pattern? Find an optimal way to merge the following 10 files whose length are: 25, 29, 9, 2, 81, 50, 89, 32, 1 and 8.	(L4)
	b)	Write an algorithm for Merge sort. Trace the algorithm to sort the following numbers: 31, 28, 17, 65, 35, 42, 86, 25, 45 and 52. Write the recurrence relation describing the best case and worst case and indicate the complexity in both cases. Draw the tree of calls for merge() and MergeSort().	(L4)

c) i) A telephone company wants to connect villages to their network to provide the teleservices. Write an algorithm to find the minimum length of cable needed for connecting all the villages. Trace your algorithm with the instance shown in Fig 1 to find the cable length for connecting all nine villages as shown in Fig.1. (L3)

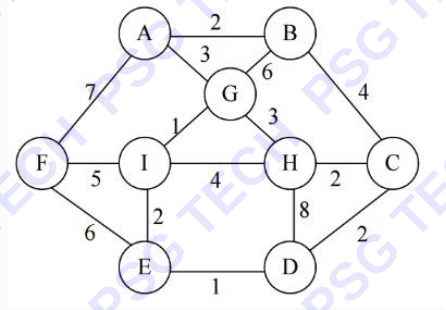

Fig.1

(OR)

ii) Parcel delivery person is to follow the map to deliver the packages. Starting from the vertex 1, the shortest path to all the remaining vertices is to be generated. Write an algorithm to find the shortest distance between the vertex 1 to all the other places. Trace your algorithm for the instance of the problem shown in Fig.2.

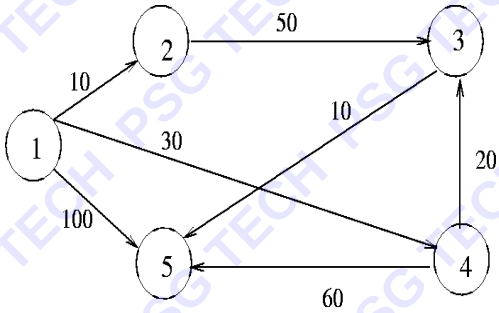

Fig.2

3. a) Given two strings, X= AGGTAB and Y=GXTXAYB, find the length of the longest common subsequence using dynamic programming. Show the intermediate steps. (L3)

b) Evacuation planningin the apartments during wildfires aims at finding the shortest route in order to minimize the time travel to get out from the building to the safety zone as quickly as possible. During such an emergency situation all pairs shortest path has to be computed and analyzed between the components such as rooms(A), lobbies(B), corridors(C) and stairs(D) as shown in Fig.3. Write an algorithm to find the shortest path between all pairs of vertices. Apply the algorithm for the instance shown in Fig.3. (L3)

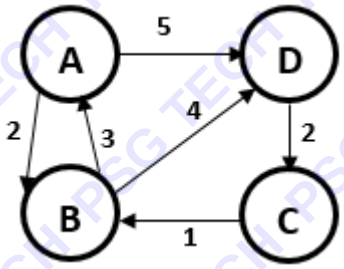

Fig.3

c) A traveller is new to the Coimbatore city. He has to travel to three different places starting from Junction Hopes with the minimal cost without revisiting the places again. Consider a graph represented by the following adjacency matrix. The edge lengthsare given in the matrix. Using the principles of dynamic programming, write an algorithm to help him determine an optimal tour and its length. (L3)

	Hopes	Singanallur	Gandhipuram	Ukkadam
Hopes	0	10	15	20
Singanallur	5	0	9	10
Gandhipuram	6	13	0	12
Ukkadam	8	8	9	0

(OR)

ii) Show that dynamic programming can be used to solve the multistage decision graph problem. Find the shortest path from the source vertex (vertex 1) to the destination vertex (vertex 9) in the graph shown in fig.4. Write the algorithm. (L3)

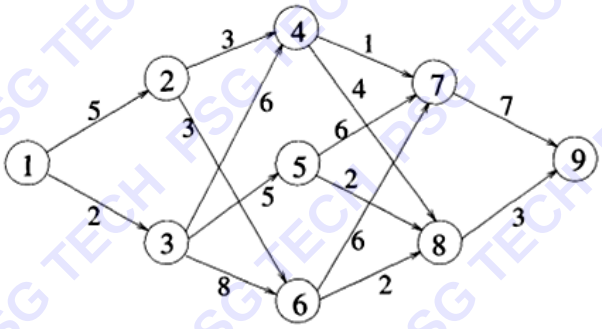

Fig.4

4. a) Choose colours for the districts A, B, …, F of the map shown in Fig. 5. Minimum number of colours should be used. Explain the algorithm design technique that can be used to solve the problem. Illustrate the steps. (L3)

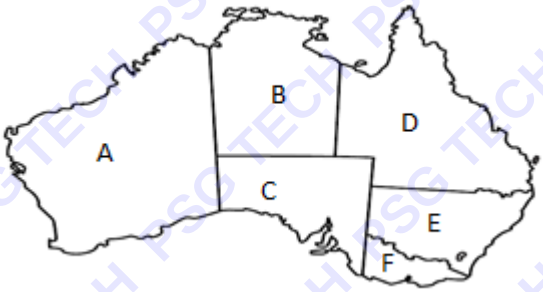

Fig.5

b) Solve the following instance of Knapsack problem using LC Branch-and-Bound approach. n=4, m=15, weight w={2,4,6,9} and profit p={10, 10, 12, 18}. Find the optimal solution (L5)

c) Write the recursive backtracking algorithm. Applying backtracking principles, solve N Queens problem. Write algorithm to print all solution to 4queens problem. Draw the state space tree of 4 queens problem as generated during backtracking. (L3)

CO : COURSE OUTCOME; BTL : BLOOM'S TAXONOMY LEVEL

/END/

FD/RL